	REVISION DESCRIPTION	CHECK	DATE	REV. NOTICE. NO
△1				
△2				
△3				

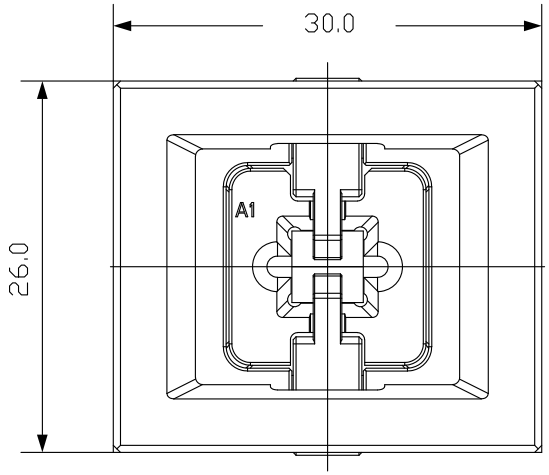

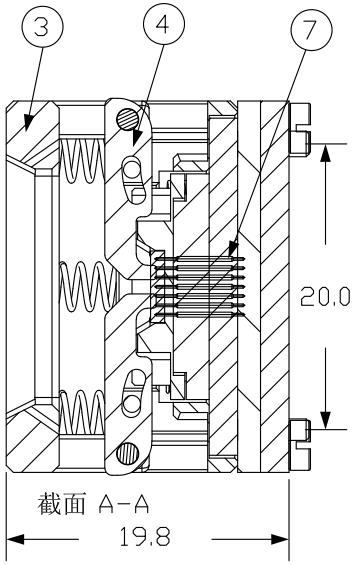

PCB PATTERN (TOP VIEW)

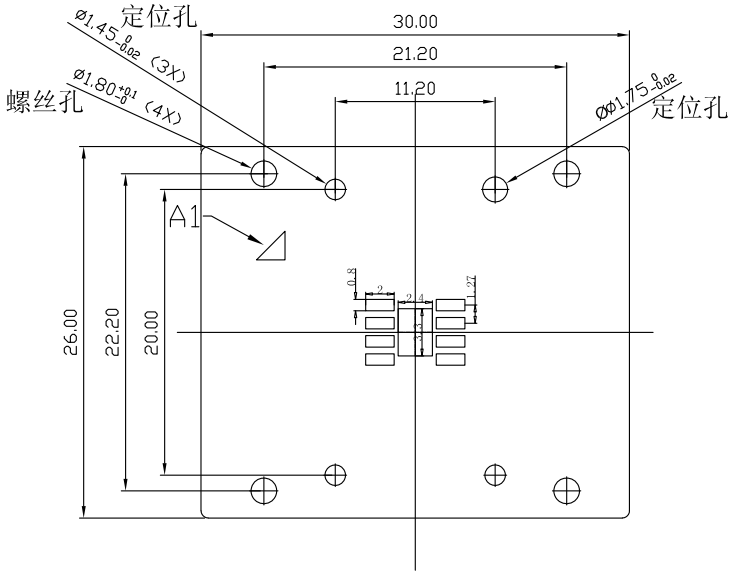

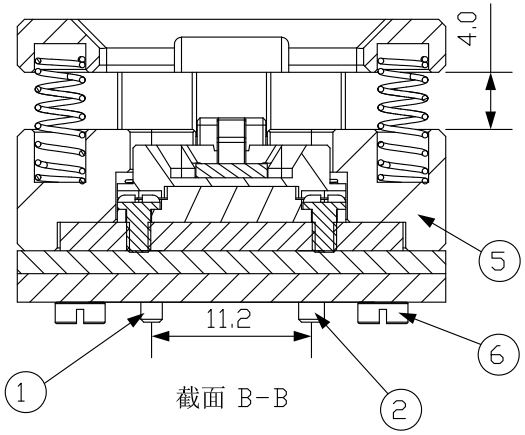

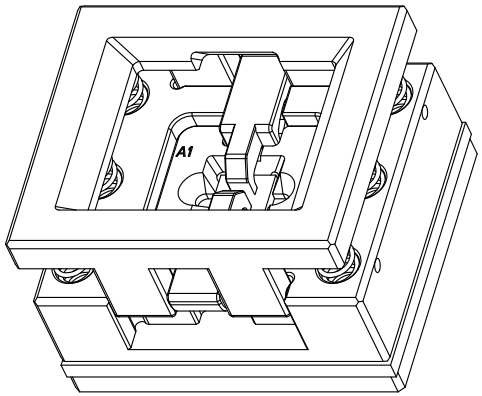

APPLICABLE IC(2:1)

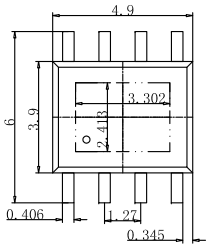

TOP VIEW

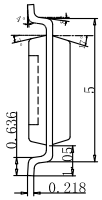

SIDE VIEW

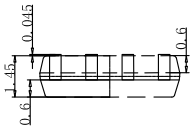

BOTTOM VIEW

注：本图档只属产品示意图，交货时请以实物为准。凯智通拥有最终解释权！

No	Part Number	Name	Material	Q'ty	Note		
7	04-A-1733	POGO PIN	BeCu	8	Au PLATING		
6	06-B-2570	SCREW	STAINLESS	4	M2X5.5L		
5	210-048-E105D	BASE	AL6061	1	BEIGE		
4	210-048-S105D	IC HOLDER	AL6061	2	BEIGE		
3	210-048-D105D	COVER	AL6061	1			
2	09-B-4005	DOWEL PIN	STAINLESS	1	⌀1.7X5.0L		
1	09-B-4003	DOWEL PIN	STAINLESS	3	⌀1.4X5.0L		

PROJECTION		GENERAL TOLERANCES	±0.10
		R E V	A
DIMENSION	mm	SCALE	1:1
APP		DATE	
0923107		DATE	
DEGK	LWH	DATE	20210322

TITLE	
CLASS	SOP8-1.27合金顶窗测试座
DRW. NO	

KZT
KaiZhiTong Micro Electronic L.,ltd
http://www.icsocket.net www.kzt.cc