	REVISION DESCRIPTION	CHECK	DATE	REV. NOTICE. NO
△1				
△2				
△3				

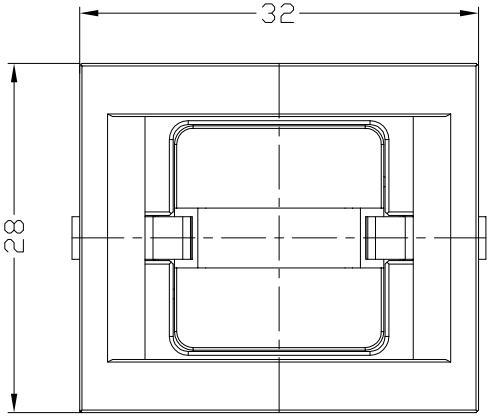

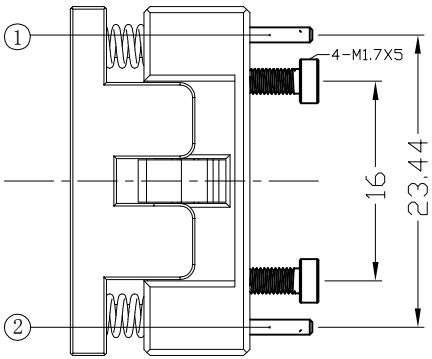

IC and Socket have the same center

PCB PATTERN (TOP VIEW)

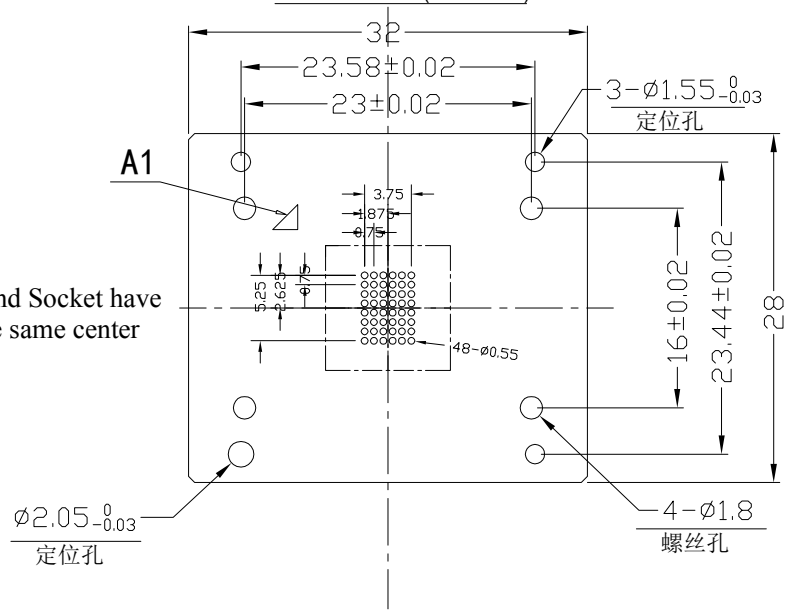

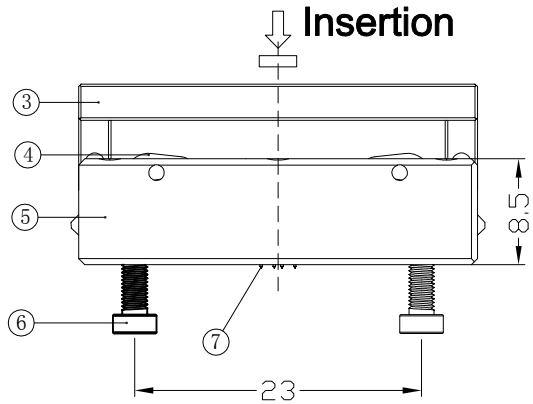

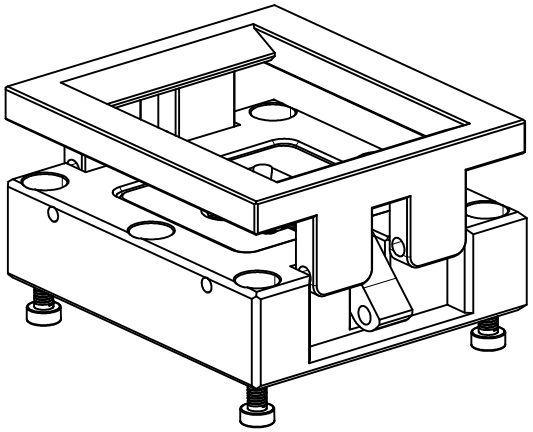

APPLICABLE IC 1:1

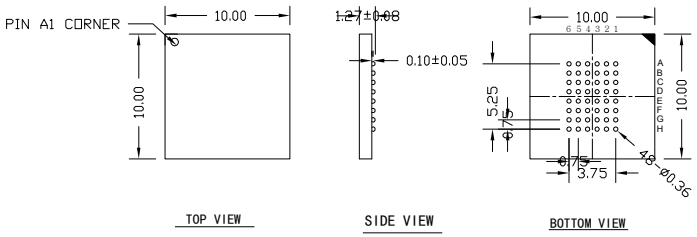

No	Part Number	Name	Material	Q/ty	Note
7	04-A-1733	POGO PIN	BeCu	48	Au PLATING
6	06-B-2570	SCREW	STAINLESS	4	M2X5.5L
5	210-048-E105D	BASE	AL6061	1	BEIGE
4	210-048-S105D	IC HOLDER	AL6061	2	BEIGE
3	210-048-D105D	COVER	AL6061	1	
2	09-B-4005	DOWEL PIN	STAINLESS	1	Ø2.0X5.0L
1	09-B-4003	DOWEL PIN	STAINLESS	3	Ø1.5X5.0L

PROJECTION		GENERAL TOLERANCES	±0.10
		REV	A
DIMENSION:	mm	SCALE:	1:1
APP:		DATE:	
0919557		DATE:	
DEGK:	ZX	DATE:	20191126

TITLE	BGA0048-0.75 SOCKET
CLASS	OPEN TOP SOCKET
DRW. NO	BGA0048-0.650-TAO1PNL

KZT
KaiZhiTong Micro Electronic L.,ltd
http://www.icsocket.net www.kzt.cc